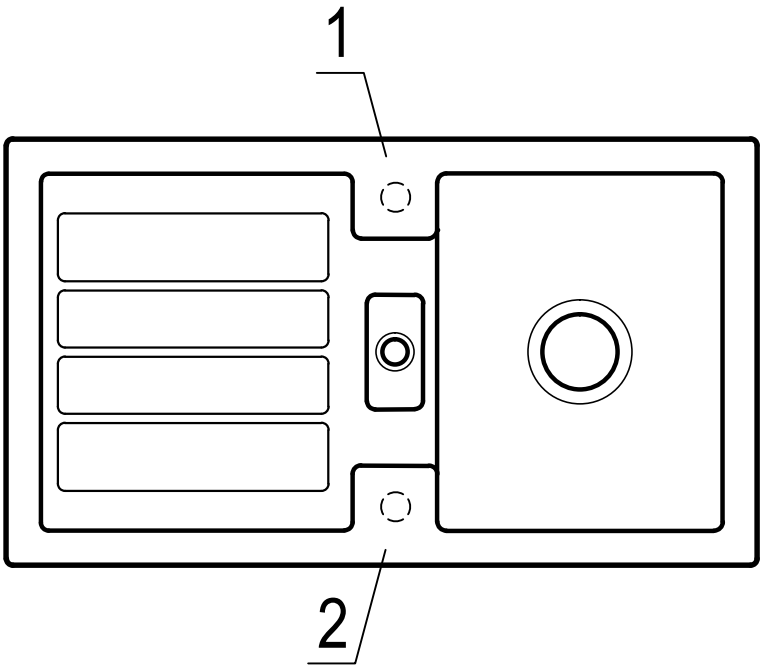
1
2

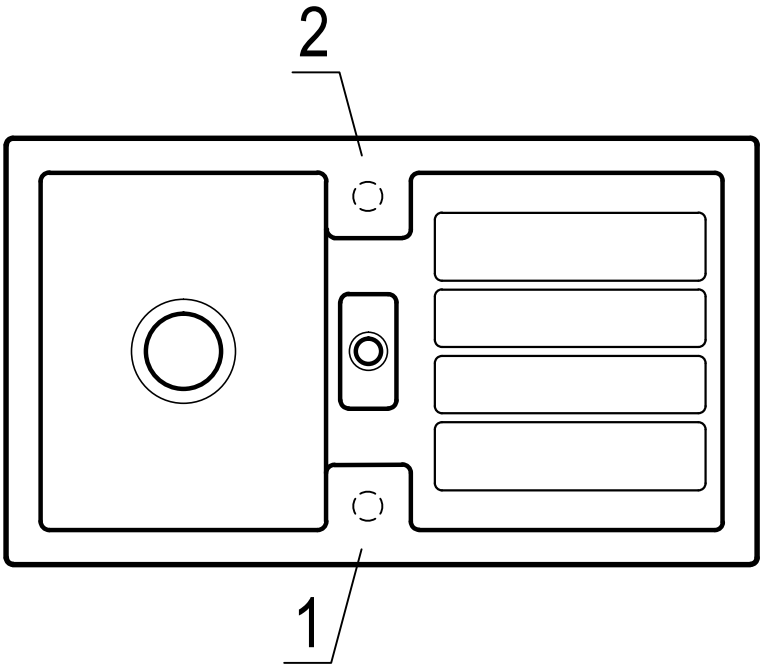
2
1